Profile- knob cylinder 1534

With red/green indicator and emergency opening with Allen key 5 A/F

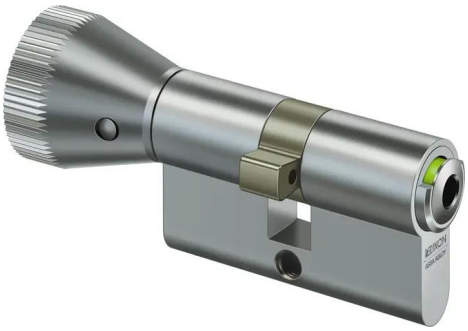

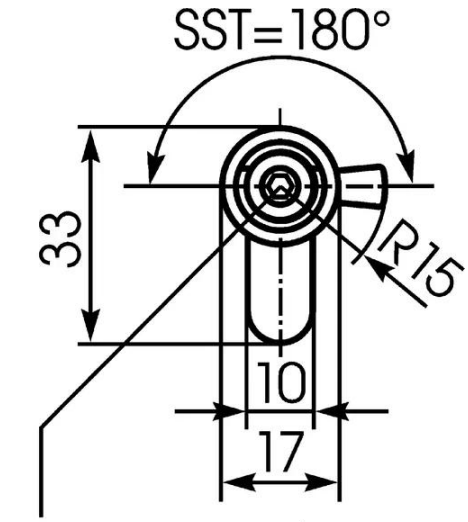

emergency opening
with Allen key 5 DIN 911

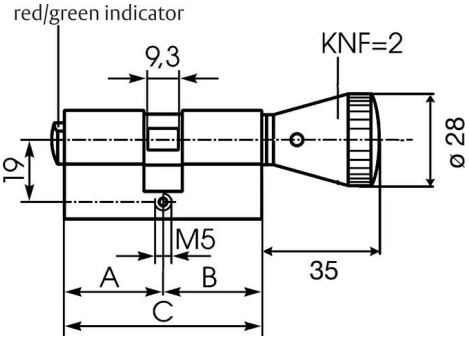

Product description

- Brass cylinder
- Standard knob colour satin nickel-plated (KNF=2MV)
- Other knob shape and finish available
- Standard finish, satin nickel-plated (OF=MV)
- Other surfaces: brass, mat brushed (OF=MG), polished brass (OF=MP)
- Basic cylinder length 61 mm (C) - A/B (L=30/30) - other installation lengths (refer to system SK6) available
- Emergency opening with coin or Allen key 5 A/F
- Locking function on one side with knob, emergency opening on other side with Allen key A/F 5
- Standard cam position (SST=90)
- Cam made of break and corrosion-resistant nickel silver profile

Scope of delivery

- 1 profile-knob cylinder
- 1 cylinder fixing screw M5 x 85 mm

Note

- Further modification VAR=1901465-X-MUENZE has additional slot for an additional charge procureable

Ordering Information

- The knob is always on the inside of the cylinder (B)
- Please do not order this item with a locking number - It is a non-locking item.

Variants that can be ordered

Article number	KNF=	OF=	L=
1534	1F2	MV	30/30
	1F2	MG	30/30
	1F2	MP	30/30
	2MV	MV	30/30
	2MV	MG	30/30
	2MV	MP	30/30
	7BL	MV	30/30
	7BL	MG	30/30
	7BL	MP	30/30
	9F2	MV	30/30
	9F2	MG	30/30
	9F2	MP	30/30

ASSA ABLOY (Schweiz) AG
Untere Schwandenstrasse 22
8805 Richterswill
Tel. + 41 44/787 34 34
www.assaabloy.ch