Key +CLIQ S130,V=PR/PSM/PN

Programming key - no locking function

Product description

- Transfers up to 3,000 programming steps to cylinders
- Can read out up to 6,000 events from the cylinders and transmit these to software
- Electronic authorisation confirmation within the software
- Protected by a 6-digit individual PIN code
- Key and locking system encryption
- Optical display and acoustic signalling for access authorisation und battery status
- The data and power transmission to the cylinder is contact based
- The data transmission to the cylinder is highly encrypted
- Temperature range 0° C to +70° C
- Splash-proof
- Power supply via commercially-available lithium battery (CR2032) approx. 2 year shelf life
- The battery can be easily changed by the user without tools
- Battery cover colour - red (FB=RT)
- Further subordinate programming keys (S130,V=PSM sub-programming-key with the ability to reprogram) are optionally available for a locking system
- Optionally available for use in potentially-explosive atmospheres in Zone 1 (Ex II 2G) ATEX=II 2G Ex ib IIB T4 Gb

Scope of delivery

- 1 programming key incl. battery

Variants that can be ordered

Article number	V=
S130,V=PR/PSM/PN	PR
	PSM
	PN

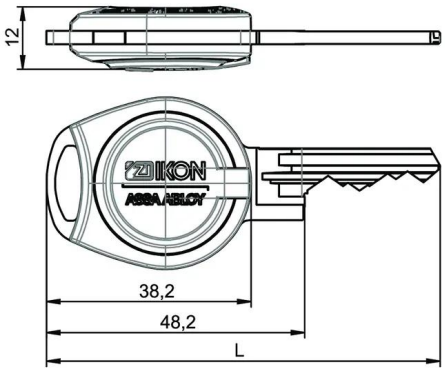

ASSA ABLOY (Schweiz) AG
Untere Schwandenstrasse 22
8805 Richterswill
Tel. + 41 44/787 34 34
www.assaabloy.ch