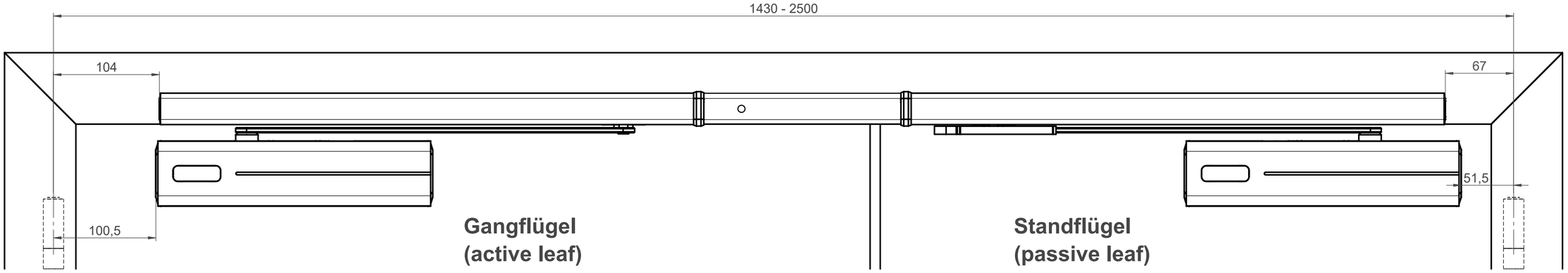

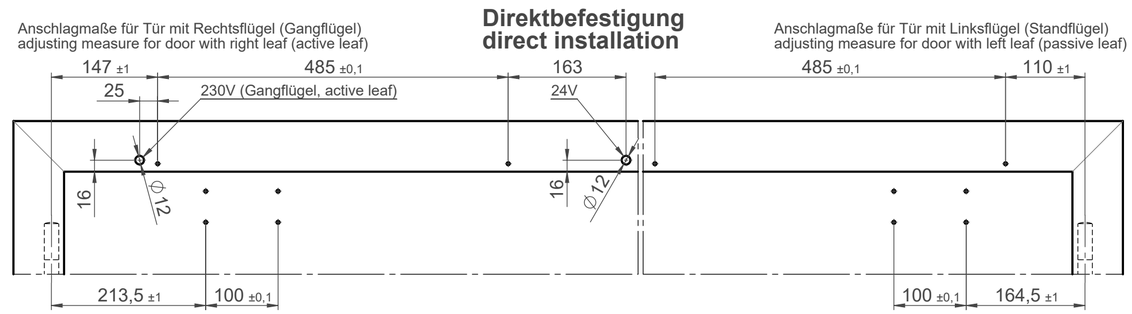

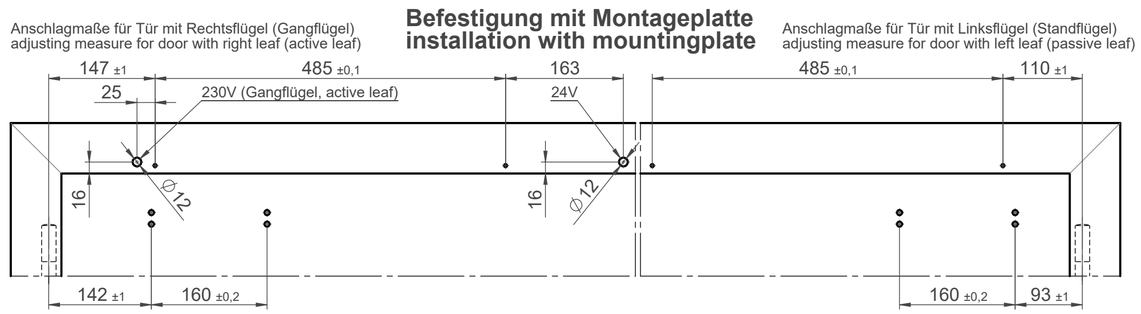

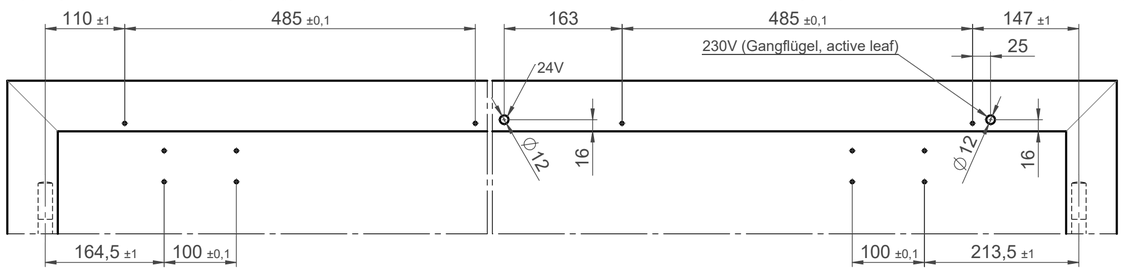

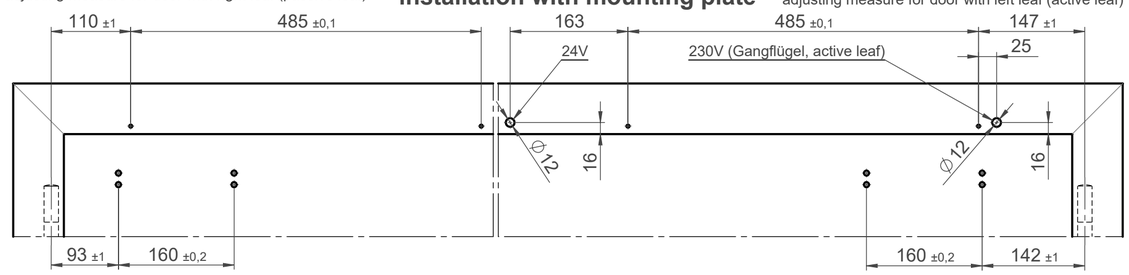

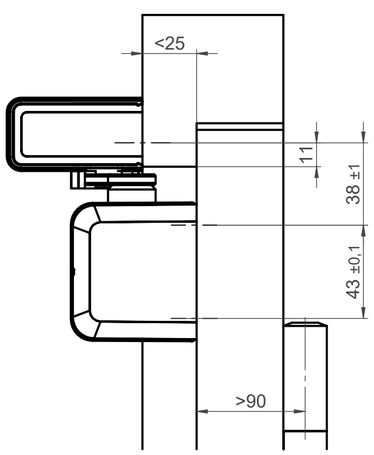

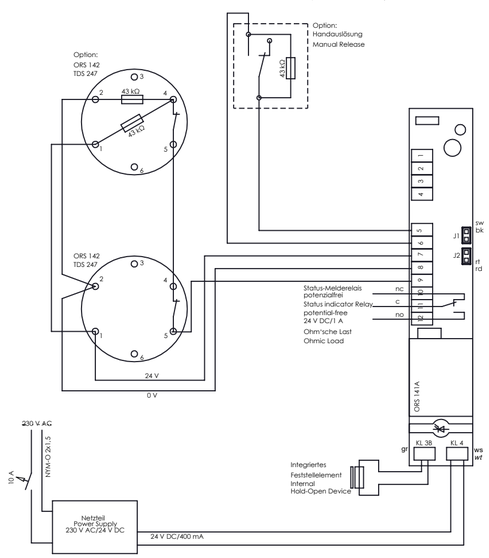

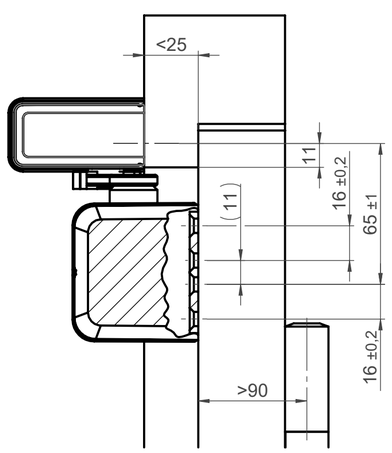

State	Description	Date	Name

Inspection Dimension

Name local language: G-CO-CS

Surface:

Material:

General tolerance:

Volume:	Weight:	Surface area:	Created (YYYY-MM-DD):	Designed by:	Drawn by:	Scale:	Projection:
			2024-10-18	andsau	PeRi	1:3 (A2)	

ASSA ABLOY

ASSA ABLOY Sicherheitstechnik GmbH

Guide rail
standard installation opposite hinge side
Bohrbild am Standflügel 12mm versetzt

Alternate ID: *G-CO-CS-12-1000*

Document ID: **D001540142-001** Rev.: **1**

A2

Approved 2024-10-24

Configuration:04a_G-CO-CSS1)m.Montageplatte_820567

SHEET 1 OF 1

This work is copyright and no part may be reproduced, by any process, nor may any other exclusive right be exercised without the permission of ASSA ABLOY.