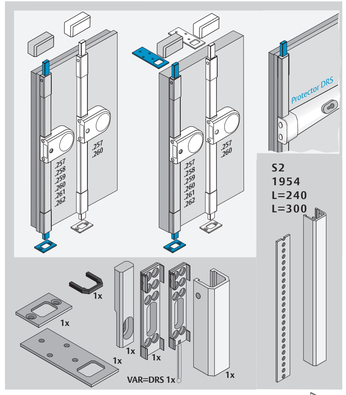

Montageanleitung
Mounting Instructions
Notice de Montage
Montageaanwijzing
Instrucciones de Montaje

IKON
ASSA ABLOY

1080
1080 VAR=DRS

ASSA ABLOY, the global leader in door opening solutions

P845114 00000 000 0H

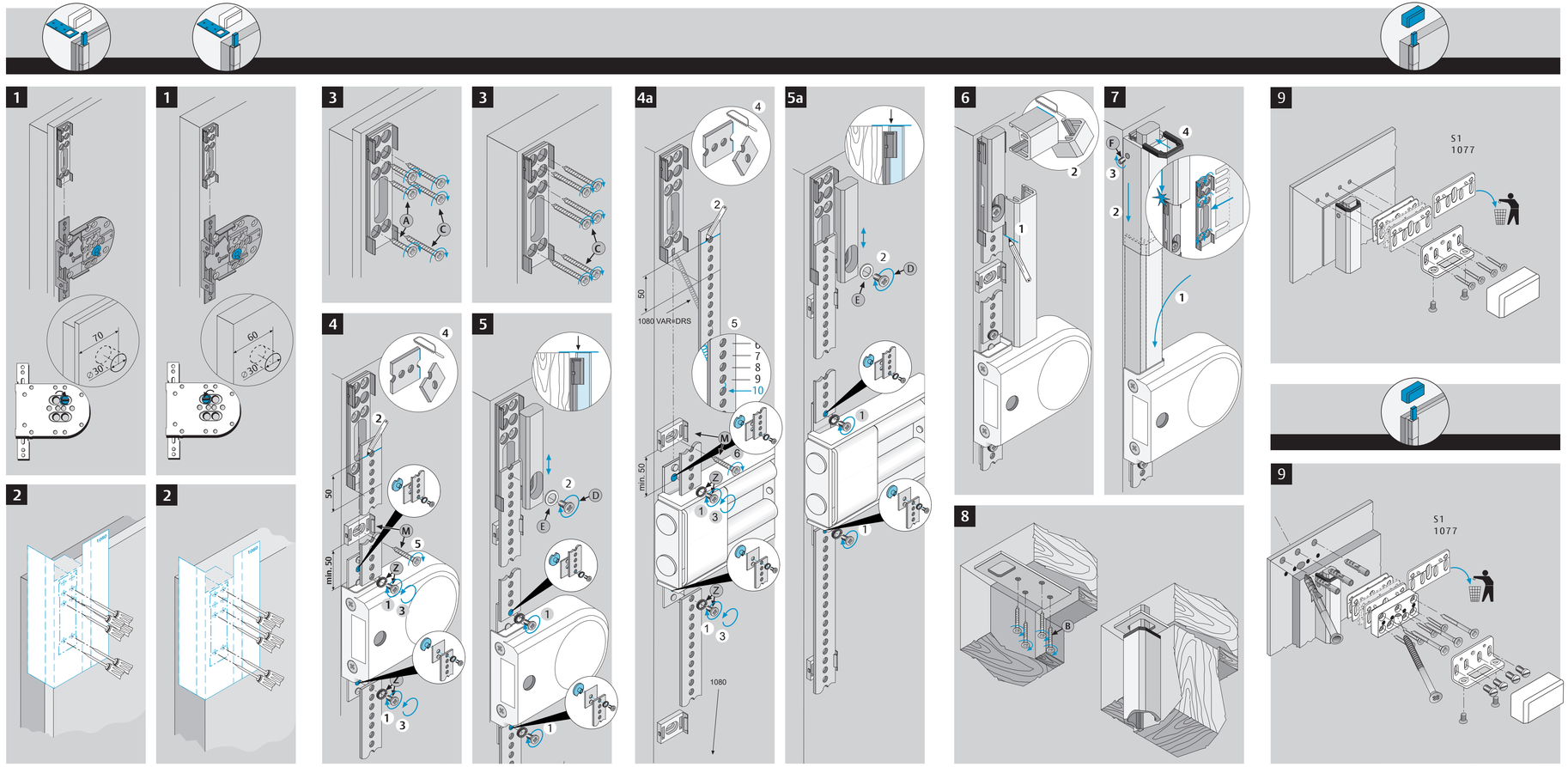

ASSA ABLOY is the global leader in door opening solutions, dedicated to satisfying end-user needs for security, safety and convenience

IKON
ASSA ABLOY

ASSA ABLOY
Sicherheitstechnik GmbH
Attilastraße 61 - 67
12105 Berlin
Tel. +49 30 81 06-0
berlin@assaabloy.com
www.assaabloy.de